JETPAK PLASTİK KİMYA AMBALAJ GIDA SAN. VE TİC. LTD. ŞTİ.	TECHNICAL SPECIFICATION	Document No: FR-105 Publish Date : 08.10.2019 Revision No : 01 Revision Date : 01.05.2024

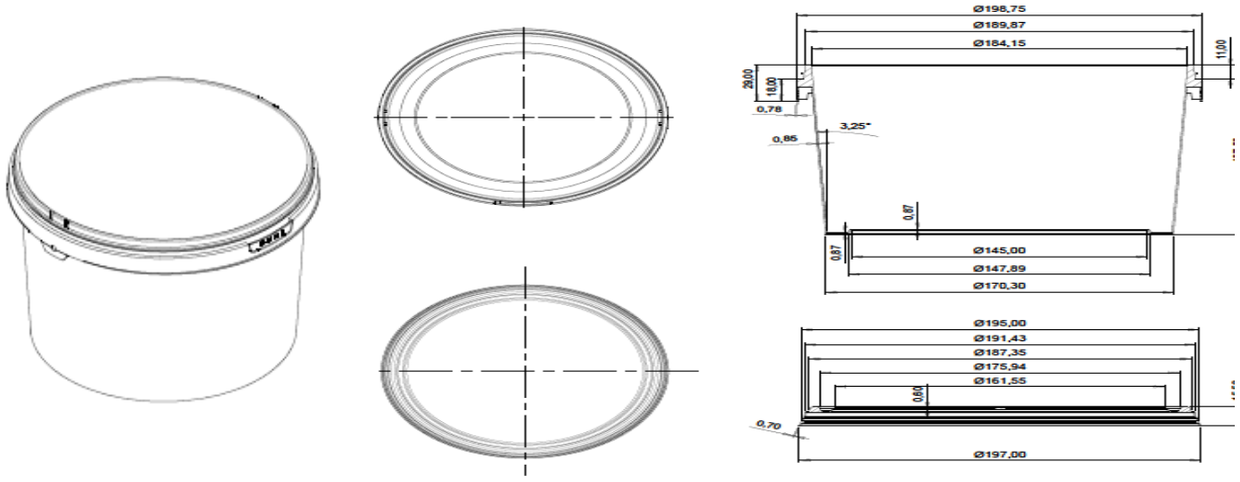

PACKAGE CODE: JP-2750 LID CODE: JP-2751

DIMENSION (mm) (± 1,5)	VOLUME(ml) (± %5)	WEIGHT (gr)
Package Width: 198,75 Packege Lenght: 198,75 Package Height : 137,60 Lid Wight :195,0 Lid Lenght : 195,0 Lid Height : 15,50	volume: 3275	Package: 89,0 (± 4) lid: 23,0 (± 2) Handle: 3,0 (±0, 2) Total: 115,0

APPLICABLE DECORATION

IML

RAW MATERIALS

Raw Material	PP	
Masterbatch	PE based Masterbatch	
Color	All colors are applicable	

PERFORMANS

HIGH TEMPERATURE USE: Generally allowed filling temperature is 85°C. After hot filling, attention should be paid to stacking. In order for the packing to reach the appropriatestacking strength ,the product and packing must cool.

LOW TEMPERATURE USE (-10 and below) Products sutiable for use must be produced with speacial raw materials. Before approvel, products must be subjected to trial tests at low temperatures.

SHELF LİFE : The features in this technical specification form are valid for 12 months under appropriate storage and storage conditons. Packing should be stored in closed, moisture-free environments away from direct sunlight.

QUALITY INFORMATION: Our production is carried out with a quality and hygiene system that is regularly inspected by the Turkish Standards Institute. Our products are suitable for use on all foodstuffs. All parameters that need to be checked periodically are analyzed by accredited laboratories.

CERTIFICATE

K - Q TSE-ISO-EN 9001

G - F TSE-ISO-EN 22000

RAW MATERIAL SPECIFICATIONS

5 PP

The technical specifications of the product can be determined by JETPAK PLASTIK KIMYA AMBALAJ GIDA SAN. AND TRADE LTD. ŞTİ. without the need for any permission or informationcan be changed by .